Engineered Dunes in Hybrid Coastal Risk-Reduction Approaches

Jens Figlus
Department of Ocean Engineering
Texas A&M University

USACE Short Course on Engineering with Nature for Sustainable Estuaries

December 13, 2018

OCEAN ENGINEERING
TEXAS A&M UNIVERSITY

Coastal Beach & Bay Foundation

The Center for Texas Beaches and Shores

TU Delft

Combine Hard and Soft Engineering Concepts

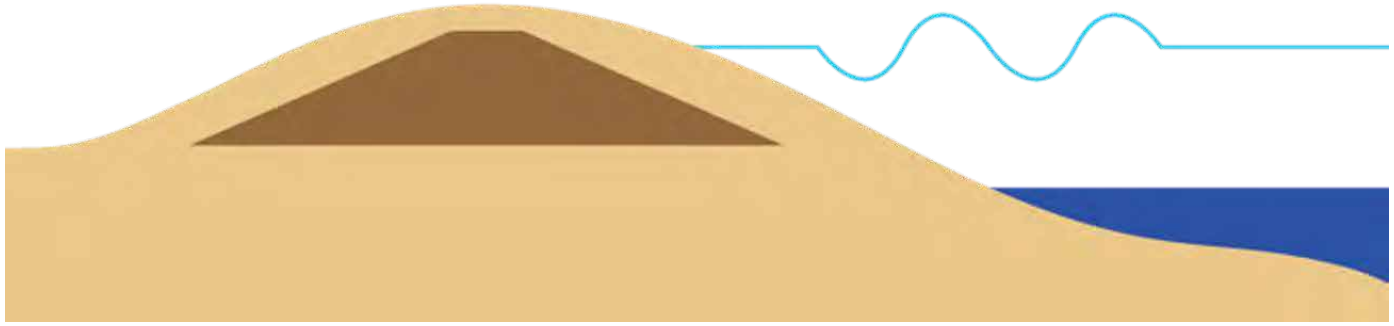

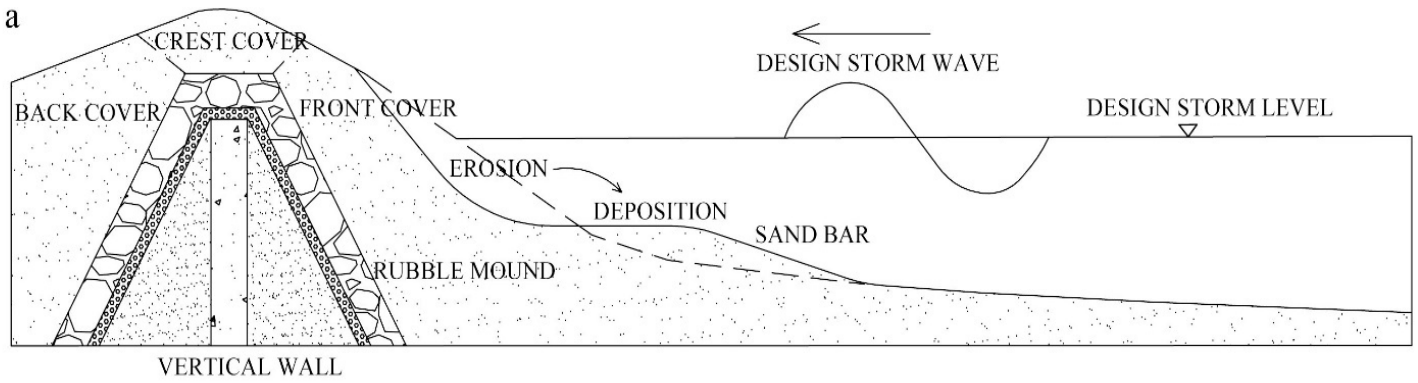

Producing Efficiencies

Using Natural Processes

Broadening Benefits

Promoting Collaboration

Investigate traditional “hard” coastal structures with complete sand dune cover to protect from storm surges and improve coastal system performance

Combine effective surge suppression characteristics of core structure with aesthetic appeal (residents, tourists) and ecological benefits (plants, animals) of dunes

Account for the added energy dissipation capacity afforded by the “sacrificial” dune cover to reduce design dimensions of the core structure (cost savings)

A Coastal Spine for Houston/Galveston?

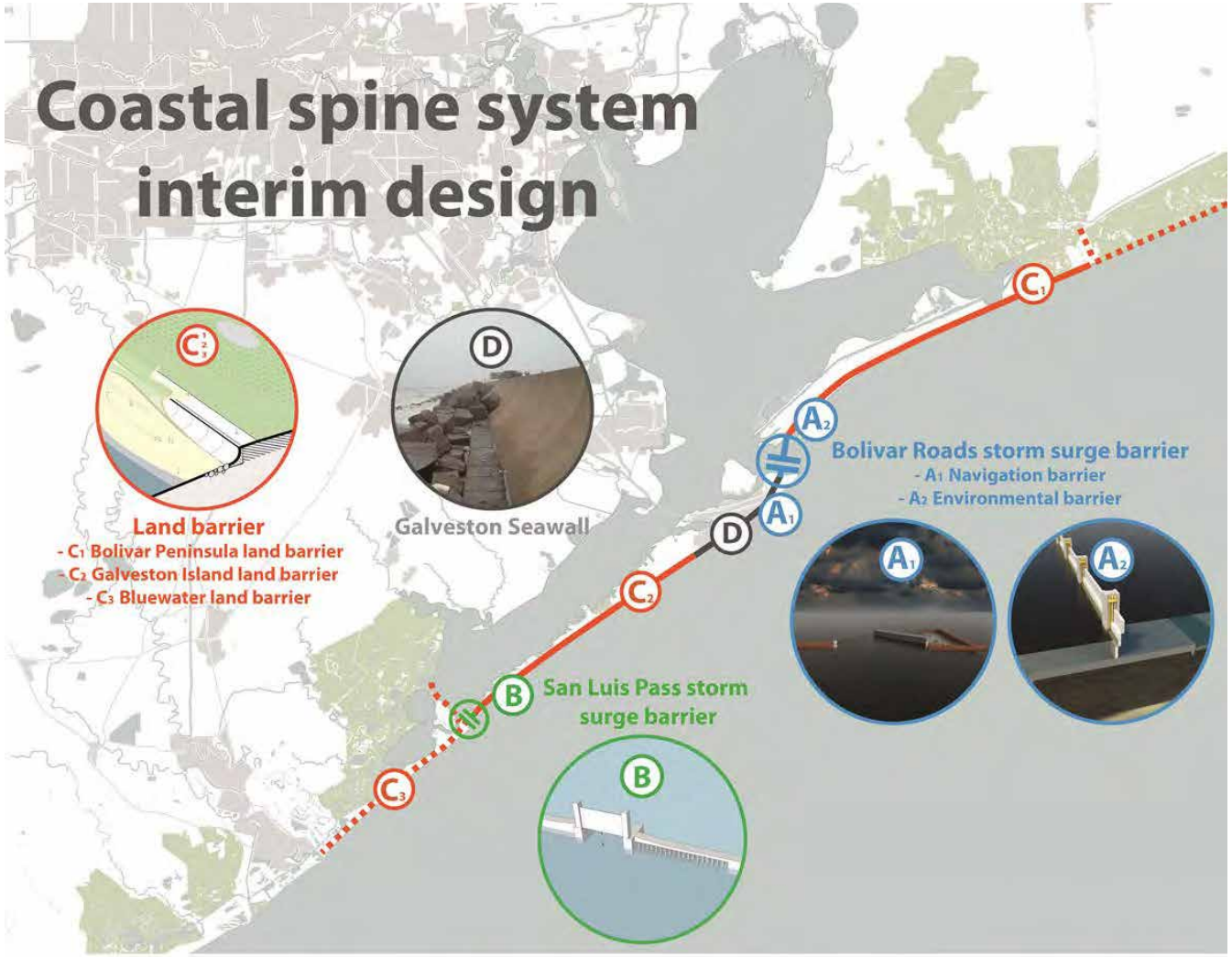

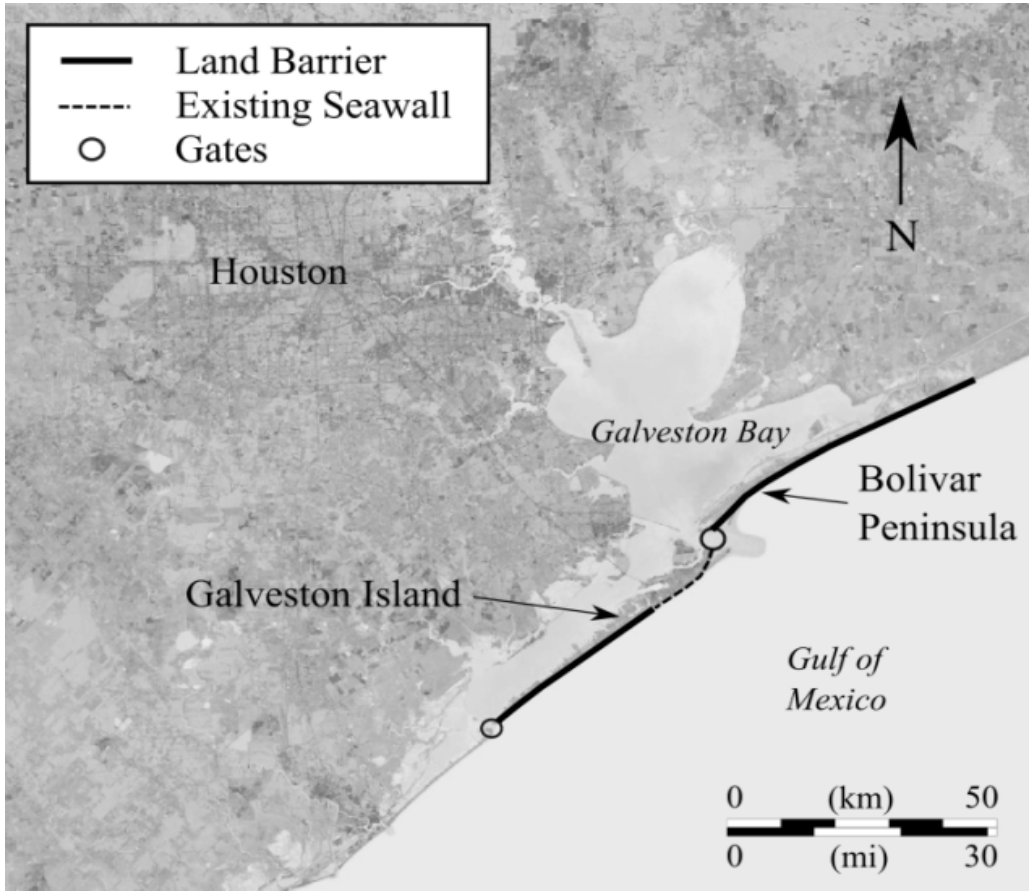

- Block/reduce surge at the coast
- Incorporate existing Galveston seawall
- Add hydraulic gates at inlets & land barrier on Galveston Island and Bolivar Peninsula

Land Barrier Concepts: Core-Enhanced Dunes

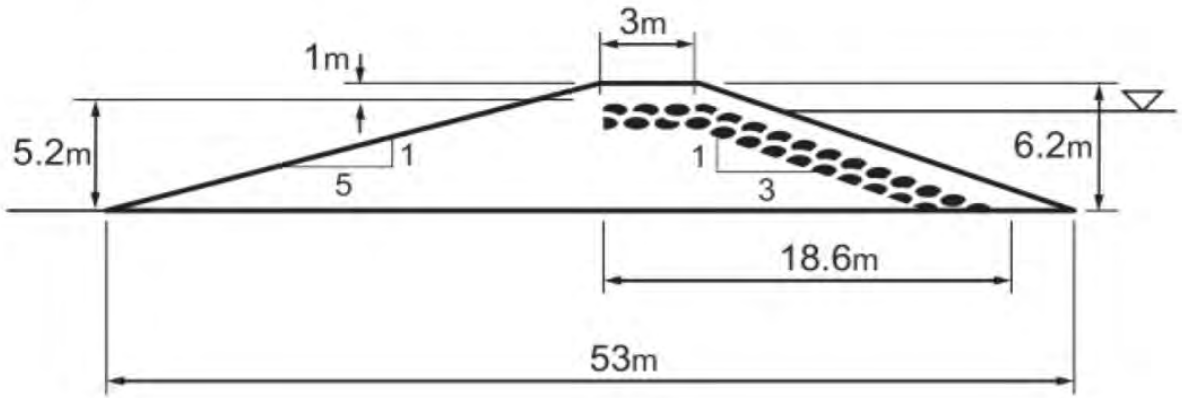

Armor stone revetment

(common shore protection)

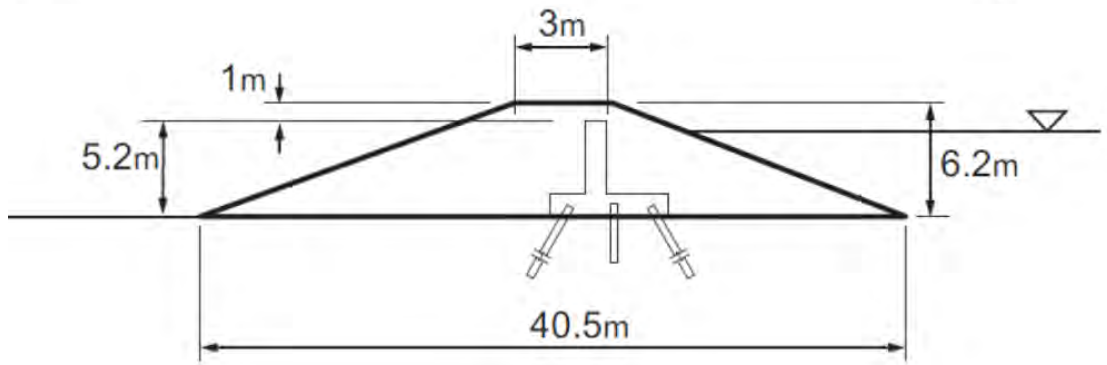

T-wall

(Successful, proven design, e.g. New Orleans)

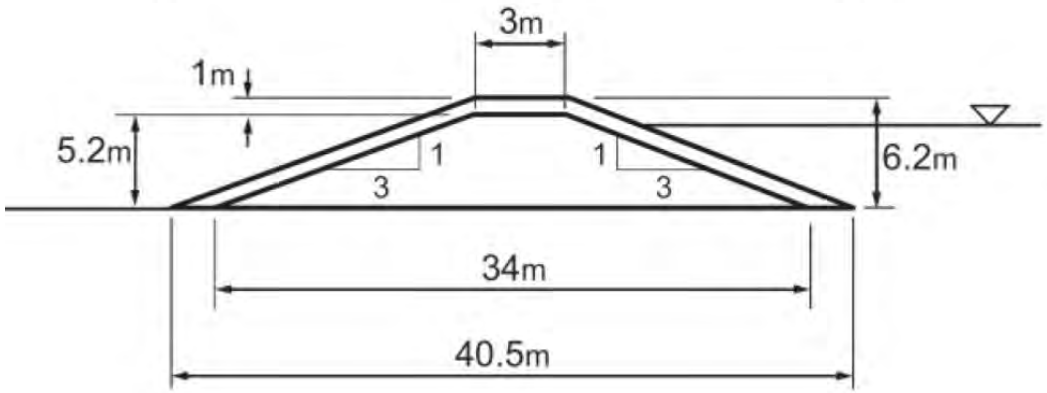

Clay levee

(Cheaply available local material)

(West, 2014)

Existing “Hybrids”

Noordwijk, NL

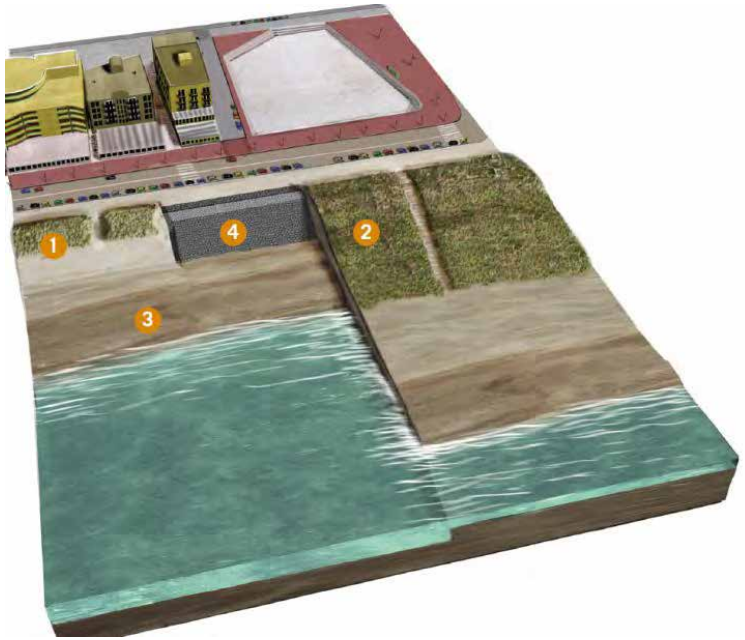

(Dr. Henk J. Steetzel, Arcadis, 2010)

Katwijk, NL

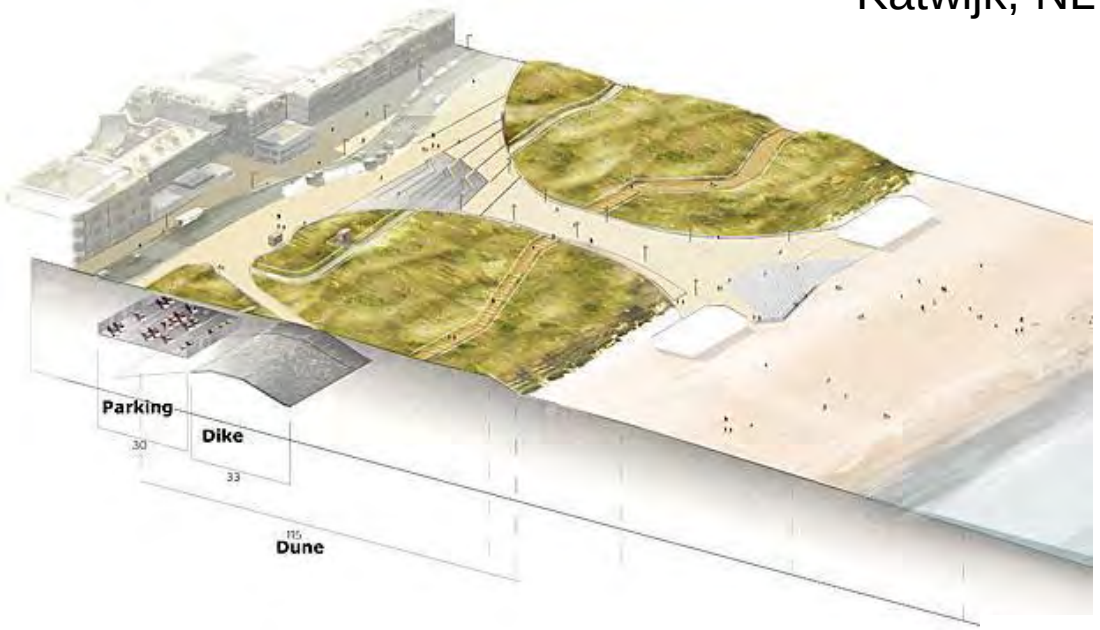

(www.government.nl)

Dike-in-Dune concept (rock-protected sand core covered with dune)

Multi-use coastal defense concept (car parking in dunes)

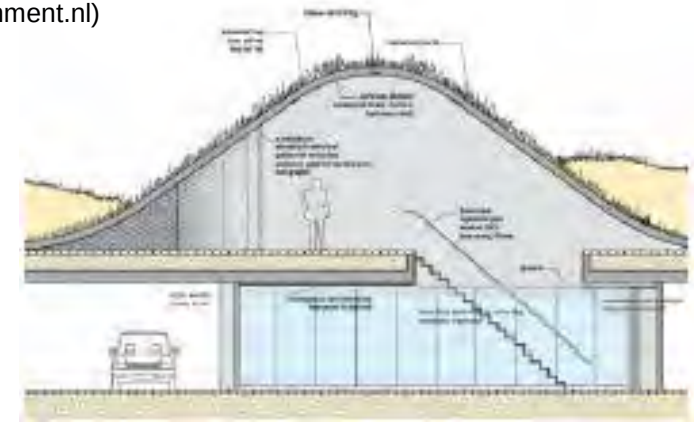

Existing “Hybrids”

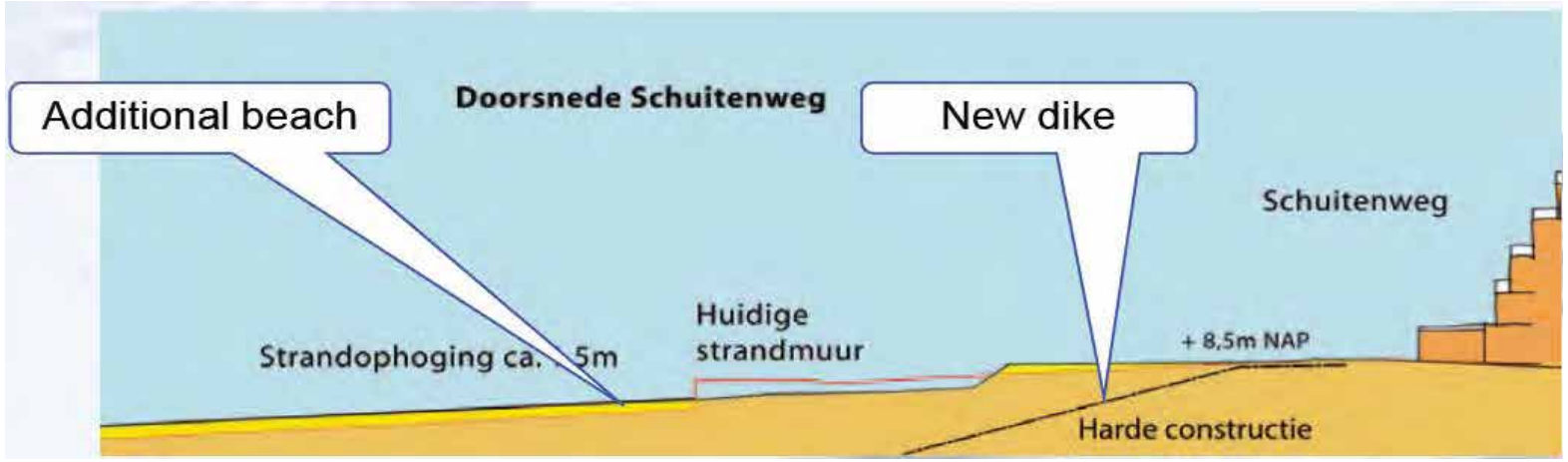

Scheveningen, NL

Concept: Dike-in-Boulevard + additional beach

(Dr. Henk J. Steetzel, Arcadis, 2010)

Existing “Hybrids”

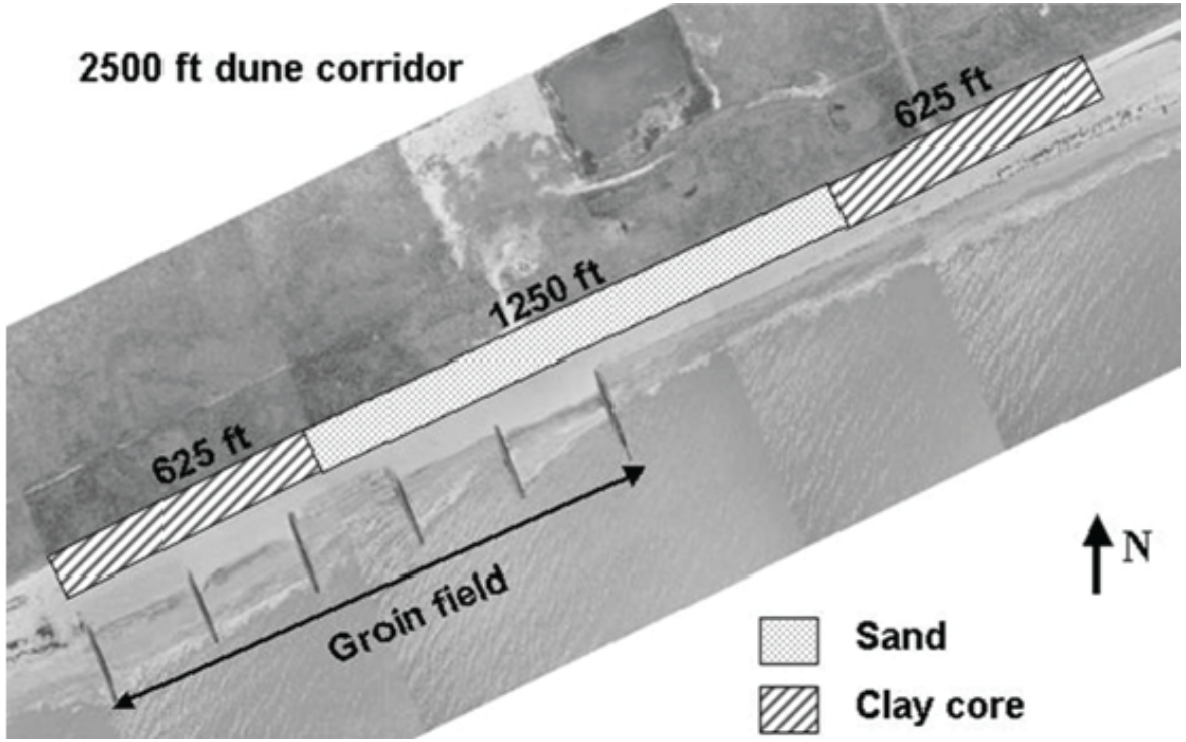

Jefferson County, TX, USA

USACE experimental low-volume beach nourishment with clay core dunes (Wamsley et al. 2011)

During Hurricane Ivan (2004) clay core dunes showed only 10% erosion compared to 50% for regular sand dunes

Existing “Hybrids”

Bay Head, NJ, USA

Photo: Jen Irish, Virginia Tech

Photo: Jon Miller, Stevens Institute of Technology

Relic rock seawall exposed by Superstorm Sandy afforded superior protection to homes and infrastructure compared to other locations (Irish et al. 2013)

Runup and Overtopping Functional Design of Hard Structures

Runup
Example Equations:

$$\frac{R_{u2\%}}{H_s} = 1.6\,\xi'_{op}$$

with

$$\xi'_{op} = \frac{tan\alpha}{\sqrt{\frac{H_s}{L_{op}}}}$$

Overtopping
Example Equations:

$$\frac{q}{\sqrt{gH_s^3}} = 0.2\exp\left(-2.6\frac{R_c}{H_s}\frac{1}{\gamma_b\gamma_d\gamma_\beta\gamma_f}\right)$$

Non-breaking waves

$$\frac{q}{\sqrt{gH_s^3}}\sqrt{\frac{s_{op}}{tan\alpha}} = 0.06\exp\left(-5.2\frac{R_c}{H_s}\sqrt{\frac{s_{op}}{tan\alpha}}\frac{1}{\gamma_b\gamma_d\gamma_\beta\gamma_f}\right)$$

Breaking waves

Engineered Dunes

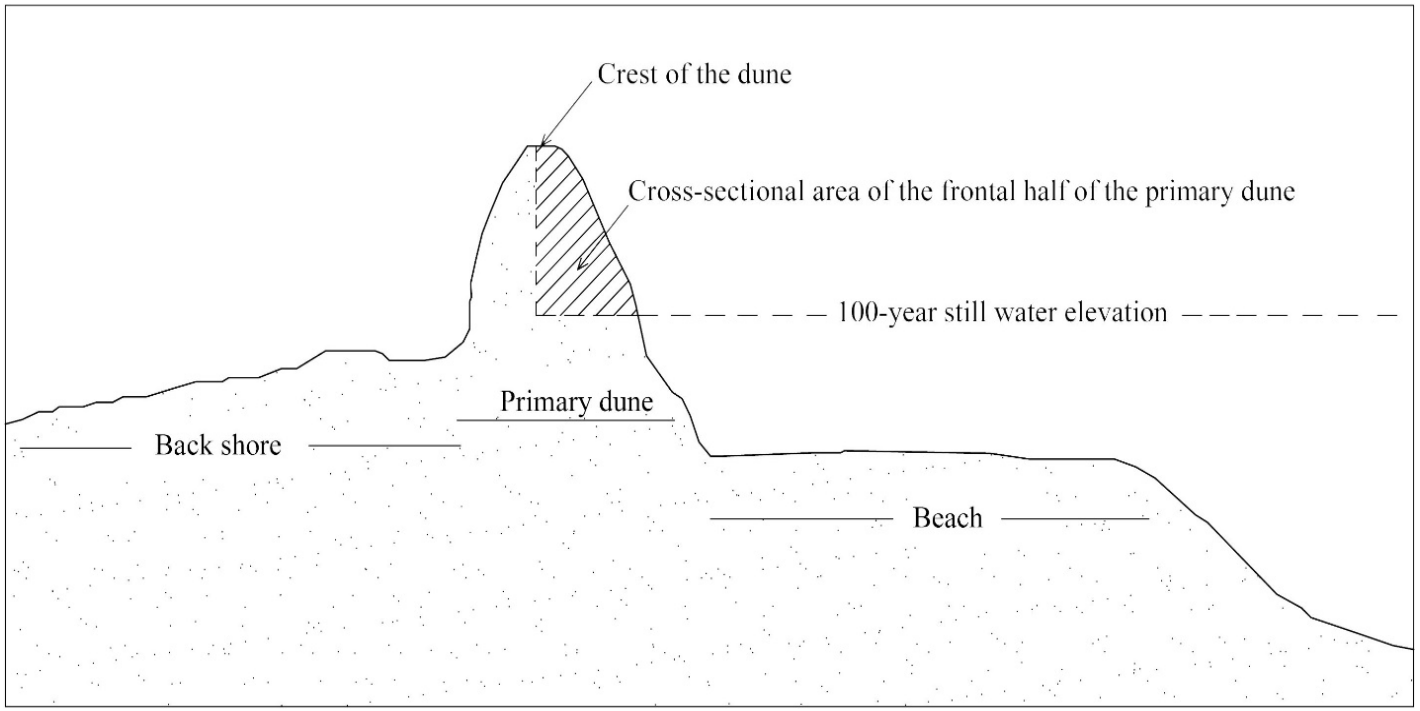

Often, flood insurance issues drive design concepts for coastal dunes.

Cross-sectional area of frontal half of primary dune above 100-year design water level:
540 ft^3/ft increased to 1100 ft^3/ft (FEMA, 2011)

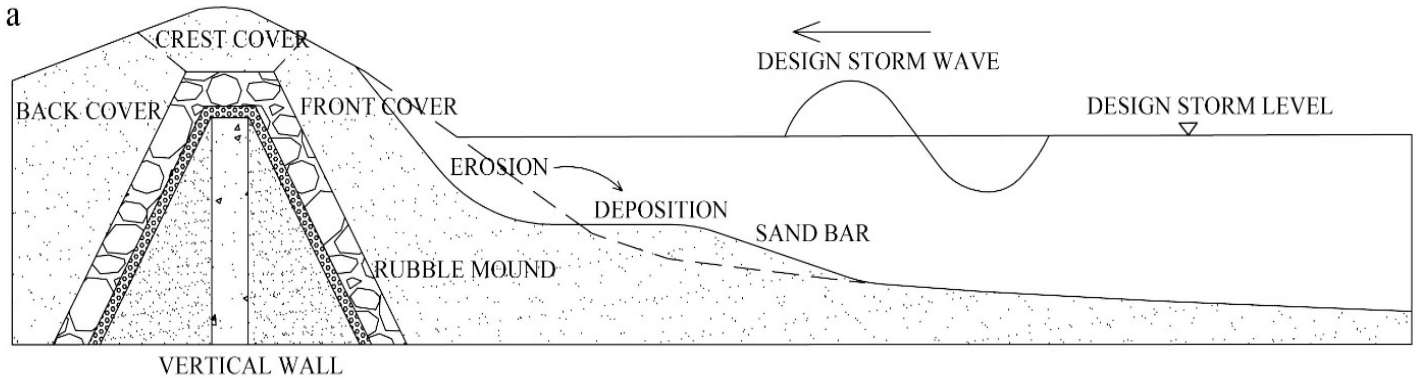

How to incorporate in hybrid design?

Numerical Model Simulations (2D or 3D)

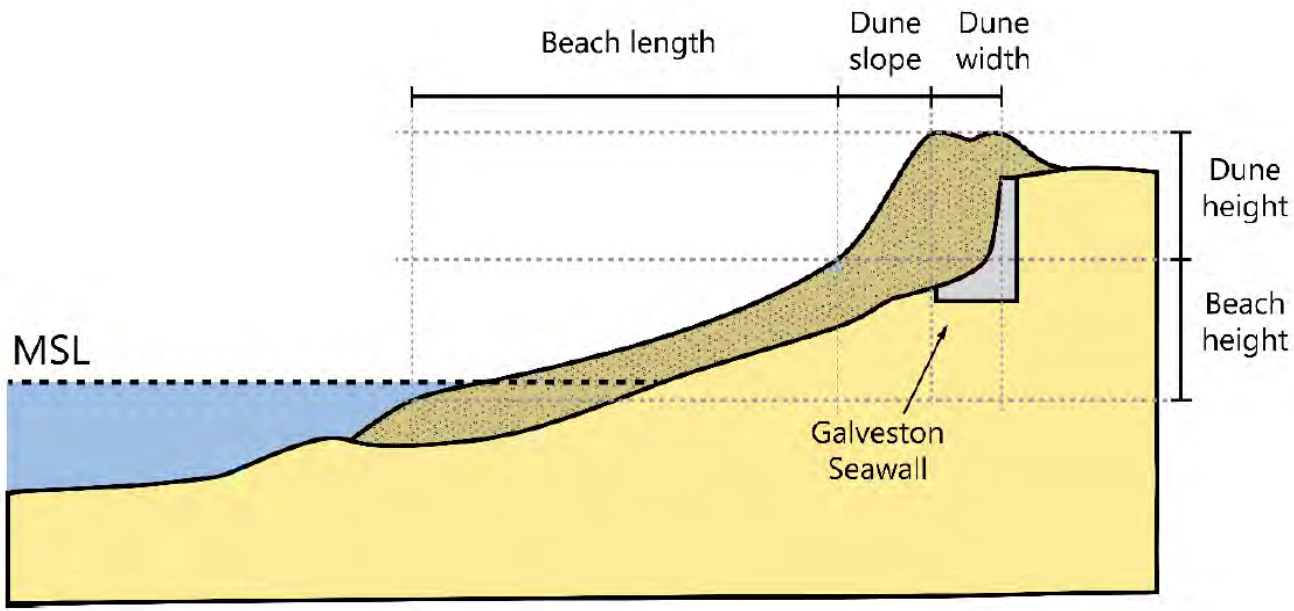

Muller, Figlus, and deVries (2018)

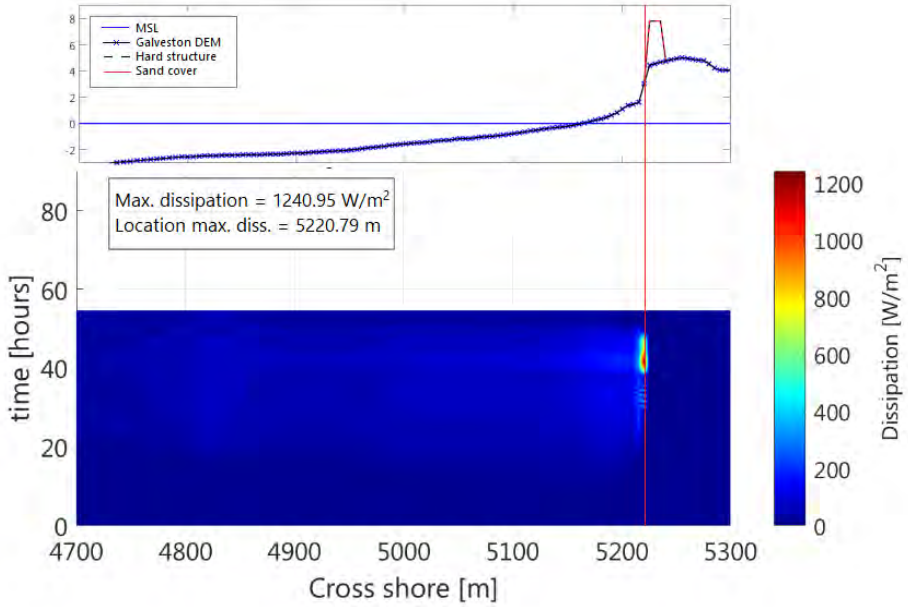

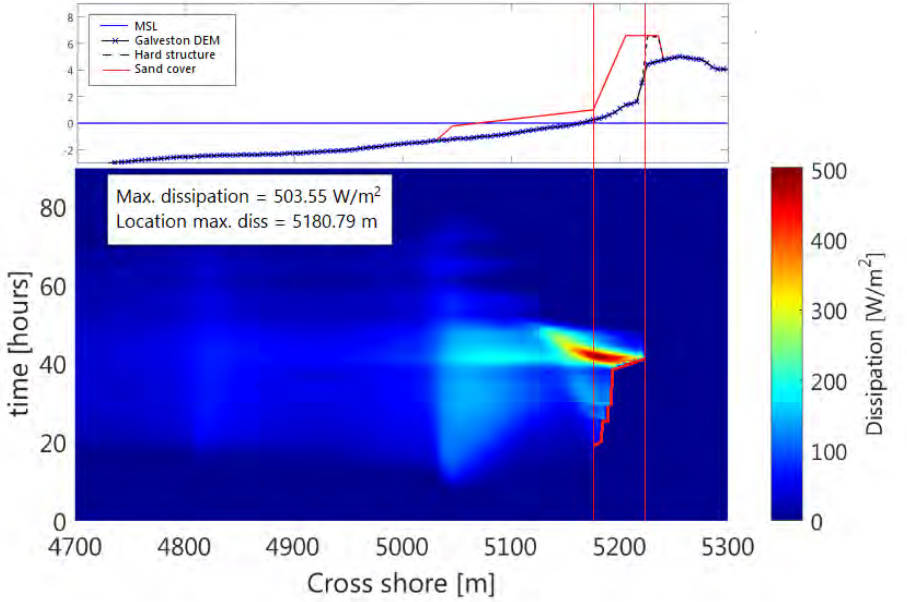

Process-based numerical models (e.g. Xbeach, CSHORE, etc.) can be adapted and modified to aid hybrid structure design.

Physical Model Testing (Wave Flume - 2D)

DC1:
Armor Stone Core

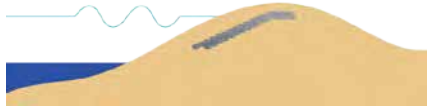

Dual layer (placed)
1:3 slope
D_{50} = 6.5cm
γ_s = 26 kN/m^3

DC2:
T-Wall Core

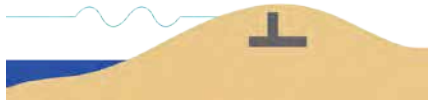

29cm vertical at
front vertex of crest
5cm sand cover
17cm base width

DC3:
Clay Levee Core

Beaumont clay/silt
1:3 slope
D_m = 16µm, σ = 33µm
LL = 59, PI = 34
τ_{sp} = 317 kN/m^2

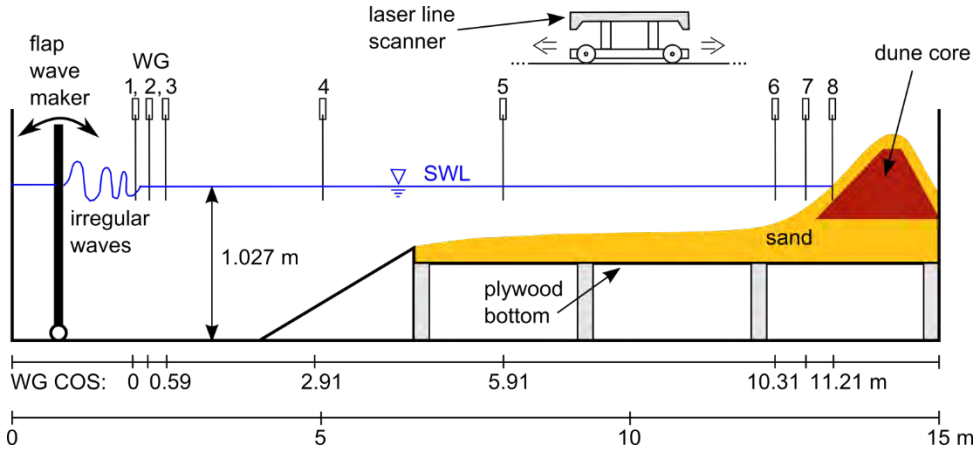

Overtopping Tests with Rubble-Mound

Physical Model Testing (Wave Basin - 3D)

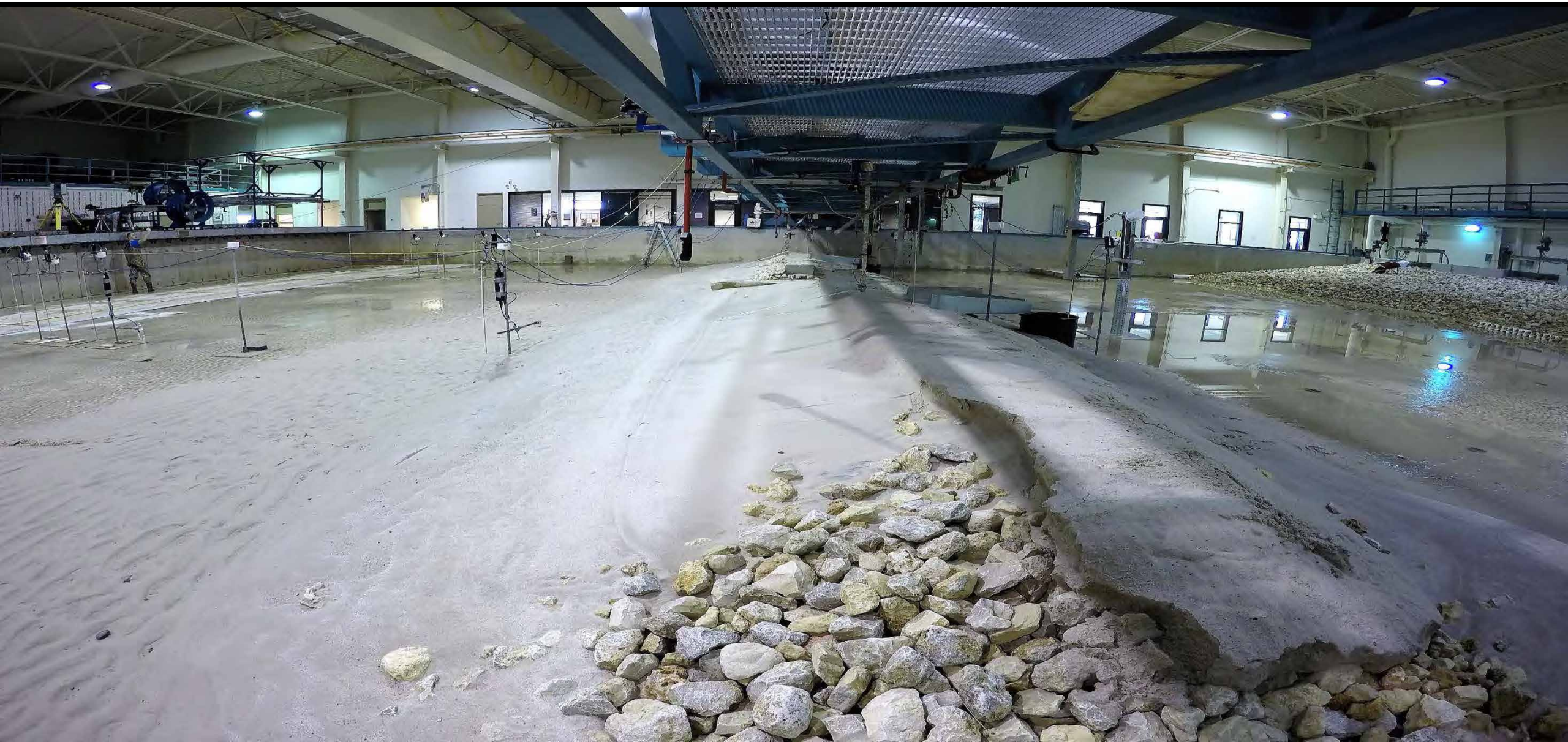

Physical Model Testing (Wave Basin - 3D)

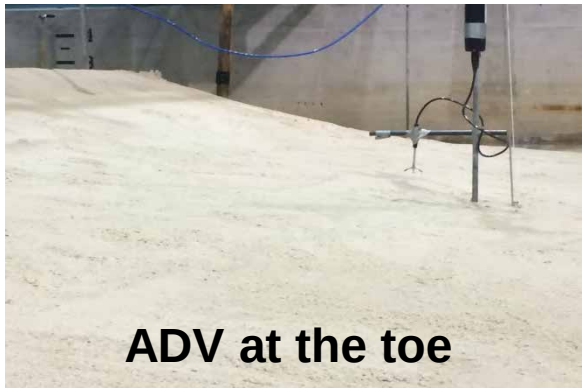

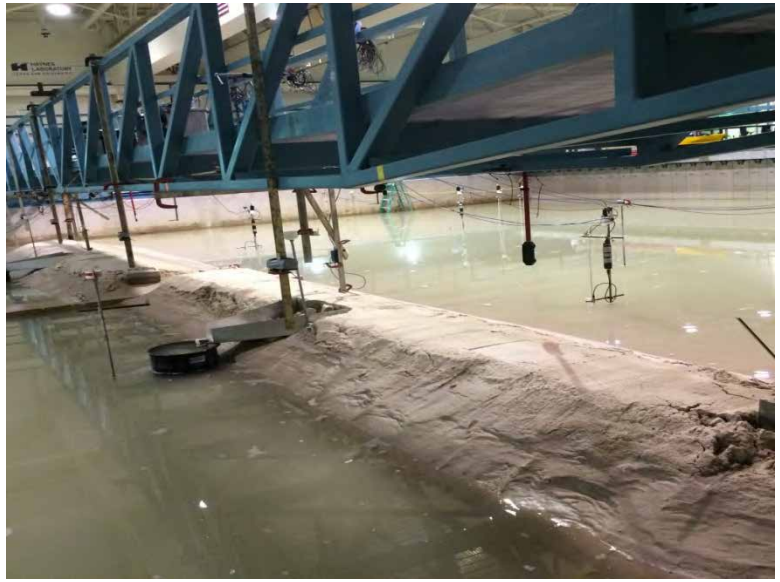

Physical Model Testing (Wave Basin - 3D)

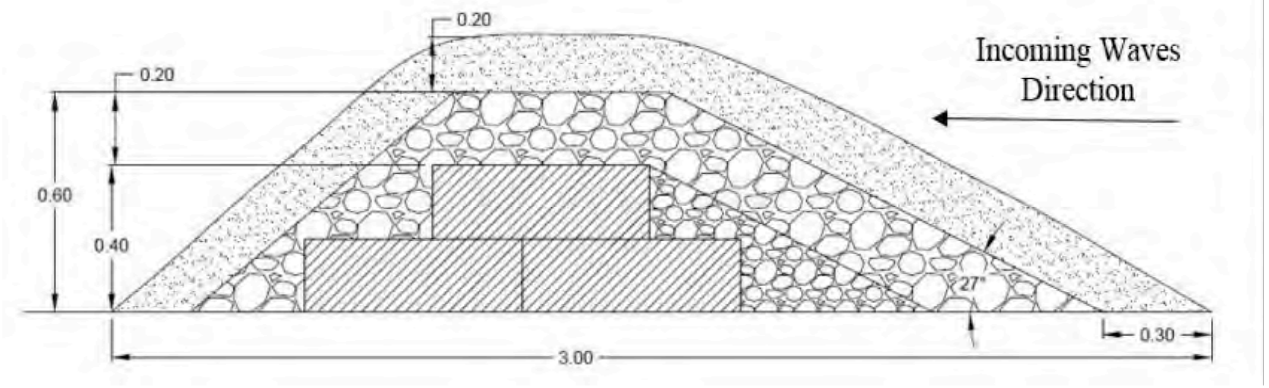

- **Multi-functional coastal flood defenses** become increasingly important and popular.
- **Hybrid coastal structures** are a way to combine benefits from various risk-reduction approaches.

1 min	3 min	5 min	8 min	10 min

Future Research Objectives and Goals

- ❑ Advance **design guidelines** for hybrid coastal structures.
- ❑ Investigate **wave overtopping** for hybrid coastal structures.
- ❑ Understand **morphodynamics** of hybrid coastal systems.
- ❑ Advance **physical** and **numerical model** investigations.
- ❑ Investigate **structural stability** of hybrid systems and identify how critical failure mechanisms are modified (e.g. overtopping, piping, instability of the structure via infiltration and erosion, etc.).

Open Research Questions

- How do sand-covered hard structures behave under storm conditions (e.g. runup, overtopping/overwash, and morphological evolution)?
- How can sand/dune cover thickness/volume be incorporated into empirical functional design equations? Does dynamic sand cover have similar effects as a static crown wall? How does the added sand volume affect scour that is usually associated with conventional hard coastal structures?
- Is there an optimal sand cover thickness or ratio related to freeboard? How can freeboard be defined for hybrid structures with sand cover?
- Will there be any dune stability or migration issues due to wave action during calm conditions and storm events?
- Dunes usually buy time for coastal residents (i.e., the time it takes a storm to erode the dunes). Is that still the case when dunes are integrated into hybrid defenses? Are there any related maintenance issues or concerns?